EXPERIMENT 2

ZENER DIODES AND APPLICATIONS

2.1 Objectives

In this experiment, the operation characteristics of Zener diodes will be observed and the study principles of clipper and level shifter circuits will be examined.

2.2 Equipment List

1. Signal Generator, DC Power Supply, DSO
2. Zener Diodes (2 x 4V7),
3. Resistor (470 Ω, 1 kΩ),
4. Potentiometer (1 kΩ).

2.3 Preliminary Work

1) Study zener diode characteristics (You can find information about Zener diodes on the document named "Zener Diodes").

2) Study Zener diode applications such as clipper, level shifter etc.

3) **Simulate** the circuits in Fig. 1, Fig. 2 and Fig. 3. Plot the input and output waveforms, $vi(t)$ and $vo(t)$. You can use any simulation software.

2.4 Experimental Procedure

1) In Fig. 1, let V=12 V and R_1=R_2=470 Ω. If potentiometer value is changed between 0 and 500 Ω, what would be the maximum and minimum voltage at the output?

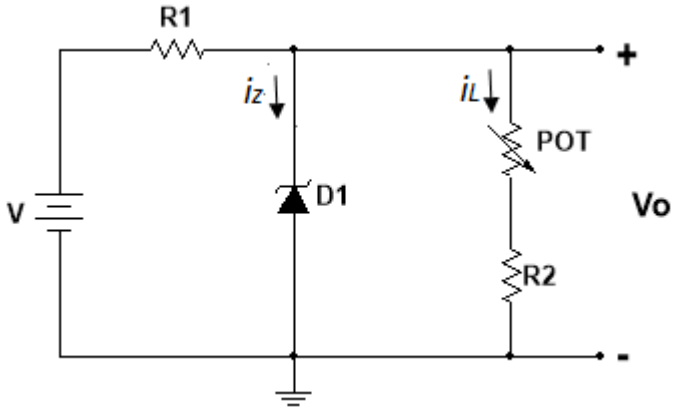

Figure 1

2) Construct the circuit given in Fig. 2 and apply $V_{in}(t) = 10\sin(100\pi t)$ as an input signal. (R=1 kΩ)

a) Observe input and output signals from the points X and Y, respectively and plot these signals to the graph paper.

b) Obtain the transfer function of the circuit.

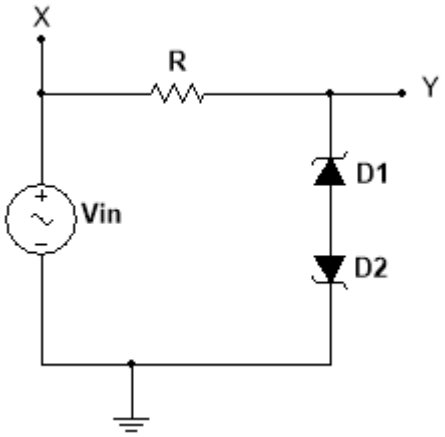

Figure 2. Clipper Circuit with Zener Diode

3) Set the circuit in Fig. 3. Adjust V_{in} to be $8 + 2\sin(2000\pi t)$. Draw the input voltage waveform, $Vin(t)$ and the output voltage waveform $Vo(t)$ on the same graph. Indicate the DC levels and the peak values of the AC components clearly. Comment on the results. (R=470 Ω, Vz=4.7 V)

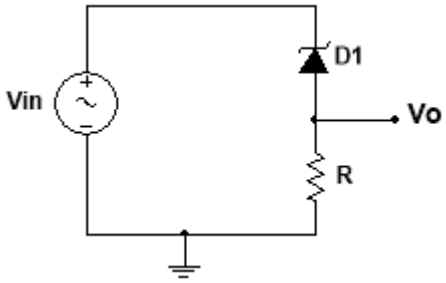

Figure 3. DC Level Shifter

2.5 Post Lab Questions

1) In clipper circuit, explain the function of the serially connected resistor between V_{in} and the Zener diode.

2) In figure 3, how does adding one more serial Zener diode affect voltage magnitude?